IPO & WIPO FILING UK

A) GB2613039.3 FILED 4-6-26/ PAY BY HEADPHONES -**DAS**-E72D

B) GB2510010.8 FILED 23-6-25 /PAY BY KEY + WIPO-**DAS**-62FD

C) GB2611652.5 FILED 19-5-26 / MULTI TOOTH BRUSH AND RAZOR AND SHAVER **(NO DAS FILE OBTAINED)**

D) GB2510034.8 FILED 23-6-25 /COMPUTER-**DAS**-0CD9

E) GB2613080.7 FILED 4-6-26/ PAY BY GLASSES -**DAS**-C35C

F) GB2622127.5 FILED 22-9-26/KEY MAIL.

G) SHELF CHECKOUT FILED 24-9-26 WITH FILE NUMBER GB2622530.0

FILED BY SUSHIL KARSAN BHUDIA

EURO HI-TECH PHOTOGRAPHIC SERVICES LTD

Since 1991

ALL RIGHTS RESERVED

WWW.EUROHITECH.COM
MR SUSHIL KARSAN BHUDIA

COMPUTER CAMERA MOBILE

PATANT FILE NUMBER: GB2510034.8-FILED 23-6-25

BY EURO HI-TECH PHOTOGRAPHIC SERVICES LTD

BUILT IN MOUSE IN THE COMPUTER CAMERA MOBILE PHONE

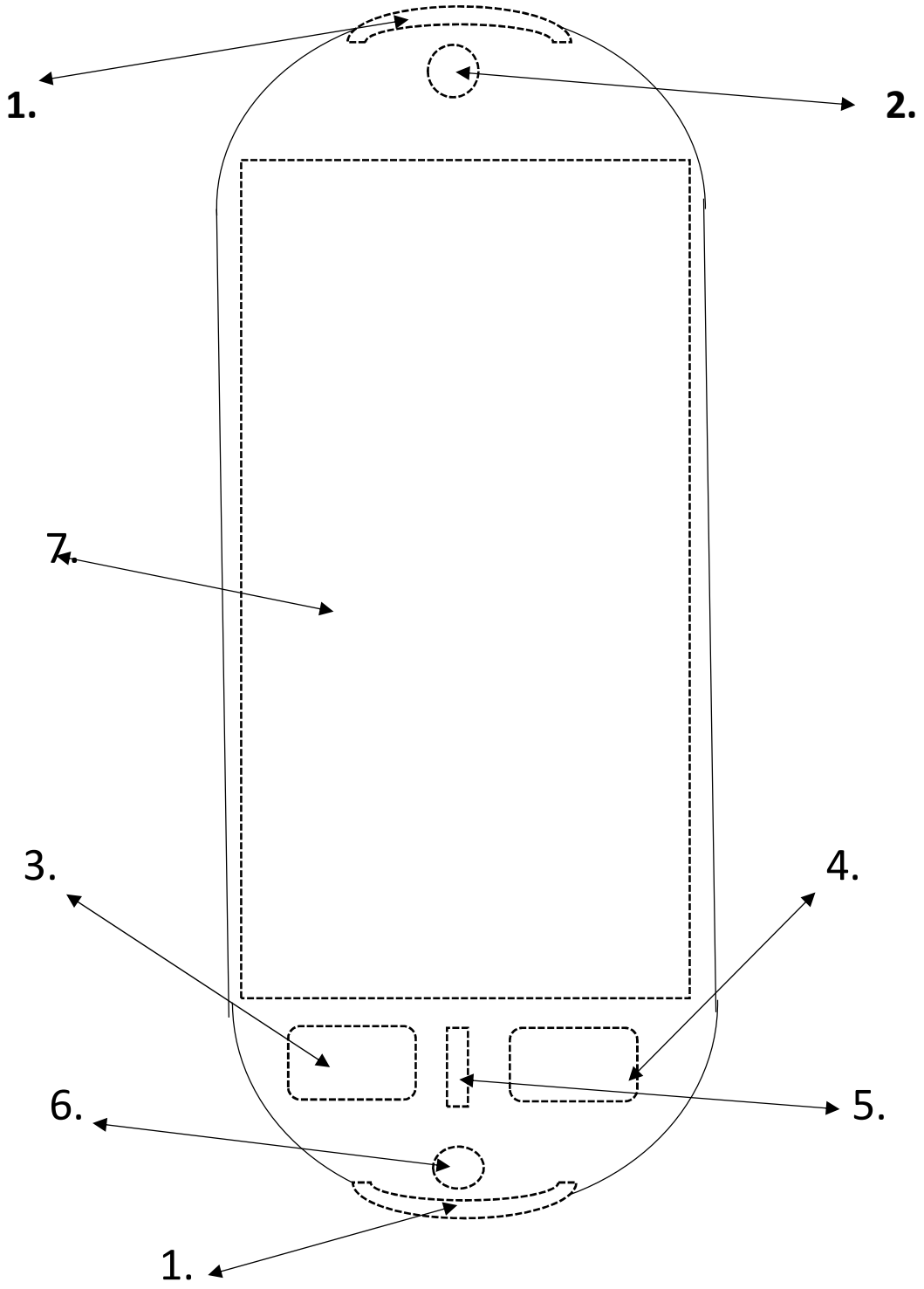

KEY:

1. SLR/DSLR TECHNOLOGY-CONTACT ASSEMBLIES
2. DIGITAL OPTICAL CAMERA
3. LEFT MOUSE BUTTON
4. RIGHT MOUSE BUTTON
5. DIAL ASSEMBLY
6. MULTICONTROL JOYSTICK
7. TOUCH LCD PANEL

FILE NUMBER: **GB2510034.8**

NO USB SOCKET/ NO CHARGING CABLE ON COMPUTER CAMERA MOBILE PHONE

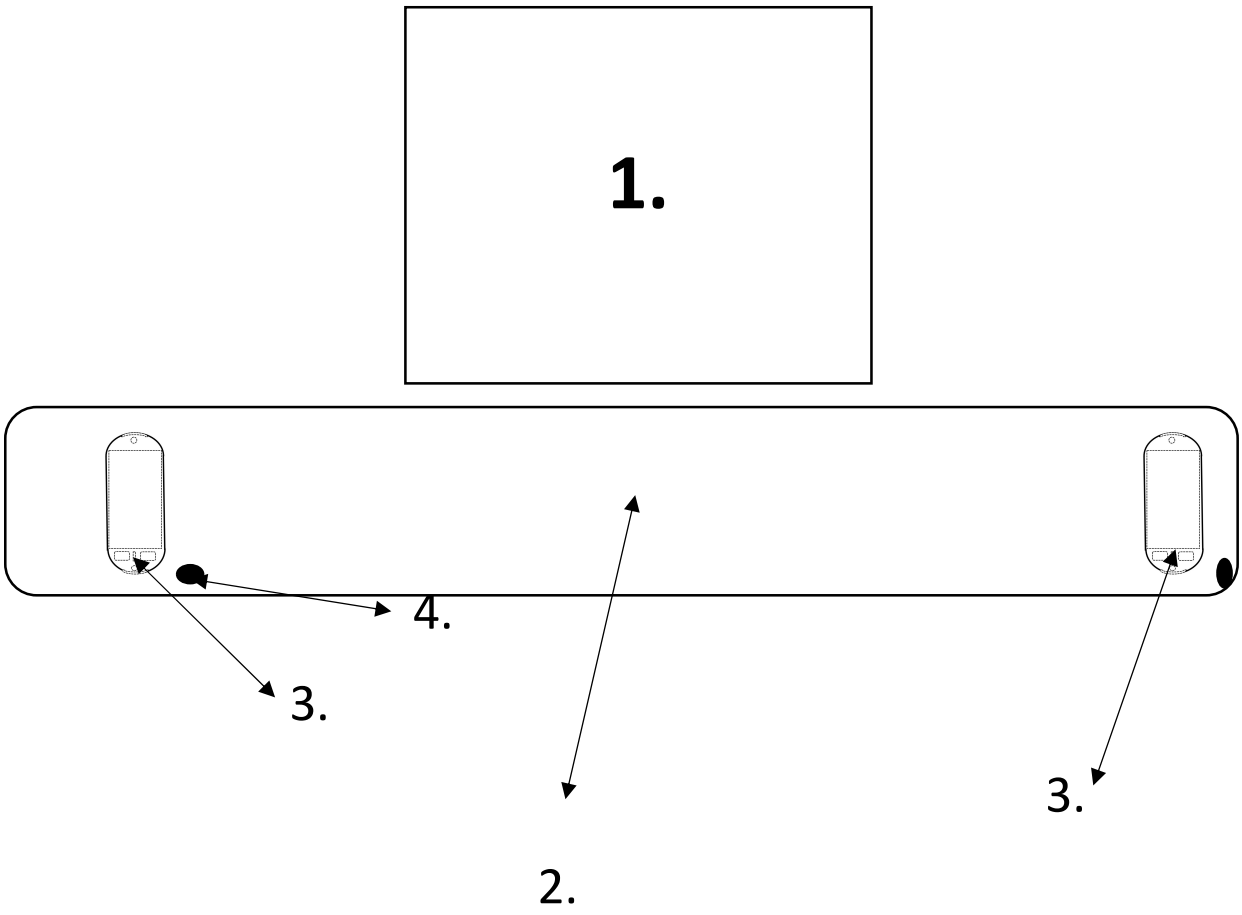

KEY:

1. UPPER TFT LCD MONITOR
2. KEYBOARD
3. COMPUTER CAMERA MOBILE PHONE
4. RELEASE UNIT

NETWORK DRIVES WITH LOCATIONS

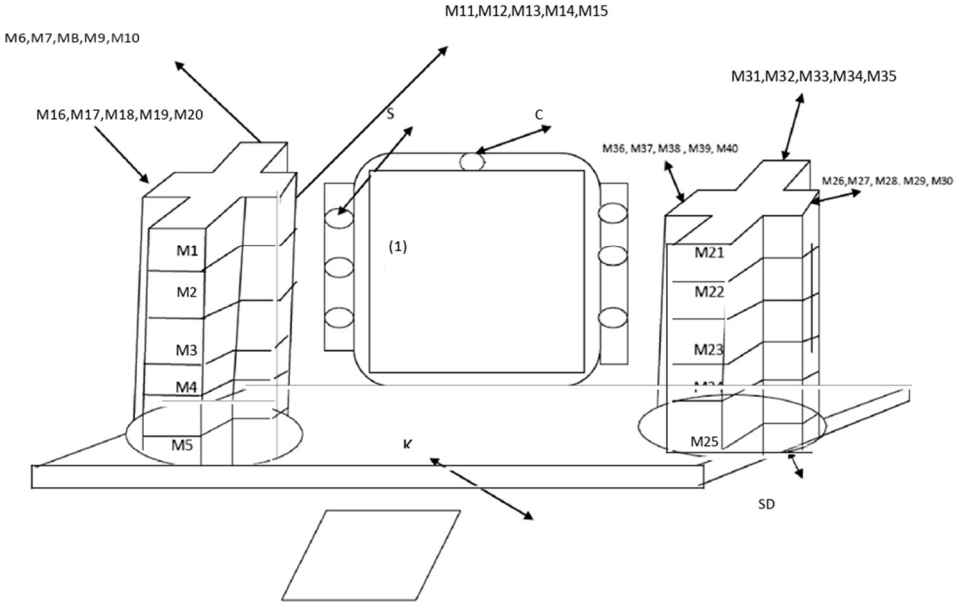

KEY:

(1) LARGER TFT SCREEN M1 TO M40 = UPTO 40 MOBILE UNITS ON A PLUS NETWORK SYSTEM
(2) S = SPEAKER
(3) C= CAMERA
(4) K = KEYBOARD
(5) SD = SPINNING DISKS

MOBILE CAMERA PHONE STACK DRIVE SYSTEMS, THIS TRACKS MONEY SUPPLY AND NEW CONCEPT OF MUSICAL SYSTEMS REMIX (MS) A- SECURITY CONCEPT.

STACKS OF M (10N) ON THE KEYBOARD

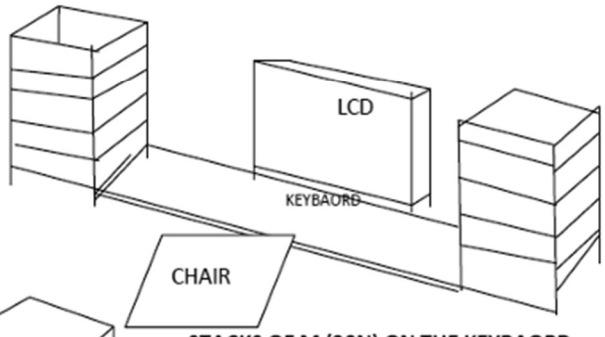

STACKS OF M (20N) ON THE KEYBAORD

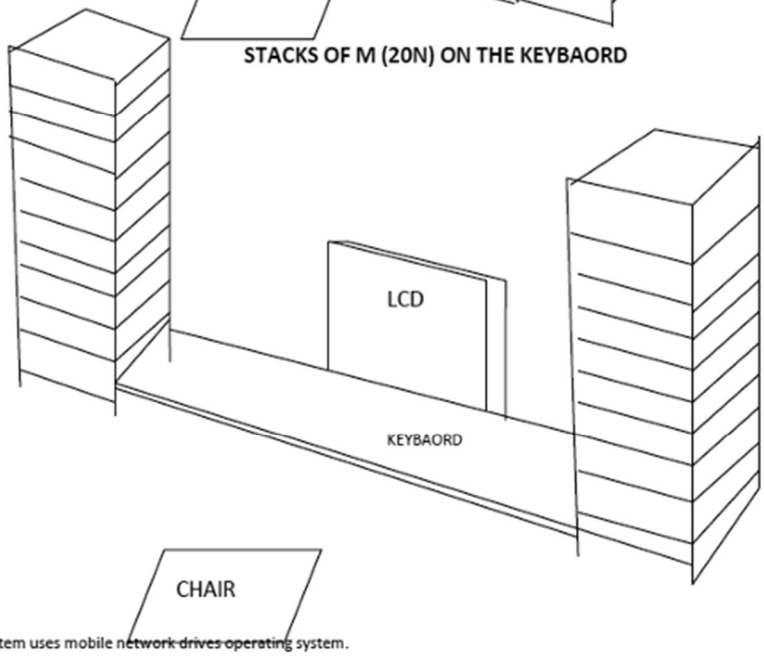

This system uses mobile network drives operating system.

FILE NUMBER: **GB2510034.8**

TABLE TOP COMPUTER -CONNECT AND DISCONNECT COMPUTER CAMERA MOBILE PHONE-BIRDSEYE VIEW

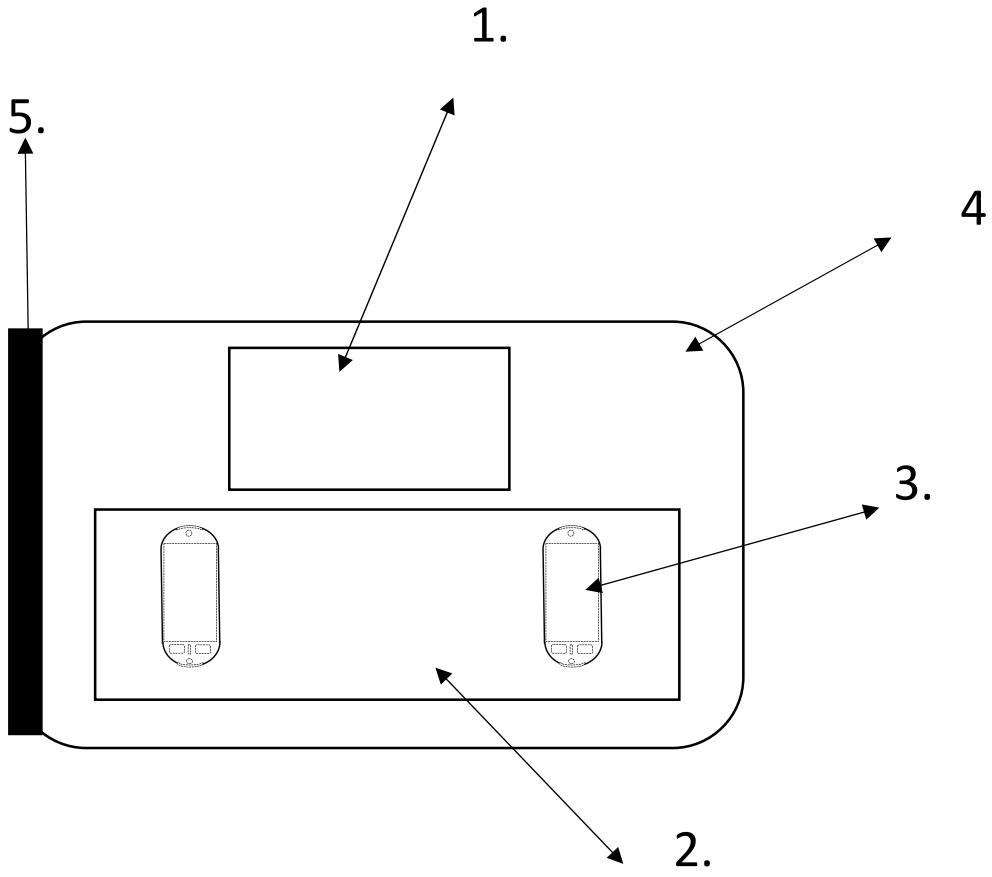

KEY:

1. BUILT IN LCD MONITOR SCREEN LARGE UPPER
2. KEYBOARD
3. COMPUTER CAMERA MOBILE DOCKED INTO KEYBAORD VIA CONTACT ASSEMBLIES
4. TABLE TOP
5. SHUTTER FOR SECURITY

ABSTRACT

Here we begin with the hand set mobile phone. It has a built-in mouse in the mobile phone. The left and right button of the mouse are built in the mobile phone device wit ha dial assembly to scroll up and down pages and a multi controller joystick to direct the curser.

There after we use a historic part referred to as Contact Assemblies found in the SLR and DSLR technology of camera market.

NO USB & NO CABLE MATHS FORMULA

NO USB /NO CABLE= 2 (PIN SET ON KEYBOARD (DSLR MIRROR BOX SIDE))
+ 2 (FLAT CONTACTS ON HAND SET (REAR MOUNT CONTACTS LENS SIDE))
+ RELEASE MECHANISM ON KEYBOARD

You can get stack systems and network plus drives on the computer camera mobile as can be seen by the expansion of networks.

The table top diagram exemplifies the built in monitor screen along with the keyboard on top of the table.

When the user brings their own camera computer mobile phone they can dock (connect in and disconnect out) into the keyboard and thereafter you will get the principle WYSIWYG(t) stands for **What You See Is What You Get Twice.**

So effectively the operating system is the computer camera mobile which dual display WYSIWYG(t) on the upper TFT Screen, via the new concept of SLR DSLR Contact Assemblies.

DESCRIPTION

The camera computer mobile is hand held device with a standard operating system. It is the reengineering of the device which makes this unique.

Firstly, the build in mouse in the hand set allows for autonomous expansion of networks.

Secondly the by using contact Assemblies, by definition this is the connectivity of the lens to the mirror box on DSLR cameras, allowing for communication of the Auto Focus and Image display on LCD. You get No USB Socket thereafter service costs falls and No Cable because the unit is sleeping directly on the keyboard.

You can expand this keyboard greater the n reaches infinity and n is the number of users.

This works simply by focusing on the keyboard and mobile communication device. This mobile pings and shares all the data and you can interact with the keyboard from the mobile mouse to the upper display on the LCD Screen.

By using the mobile phone to share the data and allowing the duplication of the mobile drive to the upper TFT Screen from the mobile phone you can save data directly on the phone thereafter making this

device international fiscal policy. (Widley available) You can access all the files effectively anywhere in the world.

This camera computer mobile phone can be applied:

1) Bus Stands
2) Train Stations
3) Stadiums
4) Banks
5) Cinema Seats
6) Car Rear Seats
7) The LCD of the computer mobile phone ca n replace the LCD of the LCD of a camera, microwave cross keypad, or LCD of the Oven Etc.
8) Tables
9) Chairs /Offices/Homes Etc.
10) Airplanes Inflight entertainment

Claims

By having the mouse built into the handset removes barriers, and creates vast networks.

By having No charging cable and No usb socket on the mobile via the new concept of *SLR DSLR Technology Contact Assemblies* this effectively allows for a new concept in computers.

You can find various designs and shapes of SLR DSLR Contact Assemblies on eBay under search “Canon Contact Assemblies”

You can have a double row of contact assemblies of more then two to minimize error codes.

You thereafter can apply solar and motion detection inside the mobile phone, and vibration when keying in on the keyboard can be use to charge the computer camera mobile.

You develop table top and chair computers and apply this computer to many other features.

There is a release unit on the keyboard to connect and disconnect the computer mobile phone.

A shutter system can be used for security with FPR finger print recognising system.

This is very easy to assembly, plug and play. Where by conventional IT Systems require costs of Labour to set up.

I claim there is a principle of WYSIWYG(t) stands for **What You See Is What You Get *Twice*,** from the computer camera mobile to the upper LCD Screen.

Here the Camera Computer Mobile Drive is detected when mobile is docked in to the keyboard and there after can interact from the upper LCD to the saving data on the mobile phone operating system.

FIGURE 1: PAY BY KEY

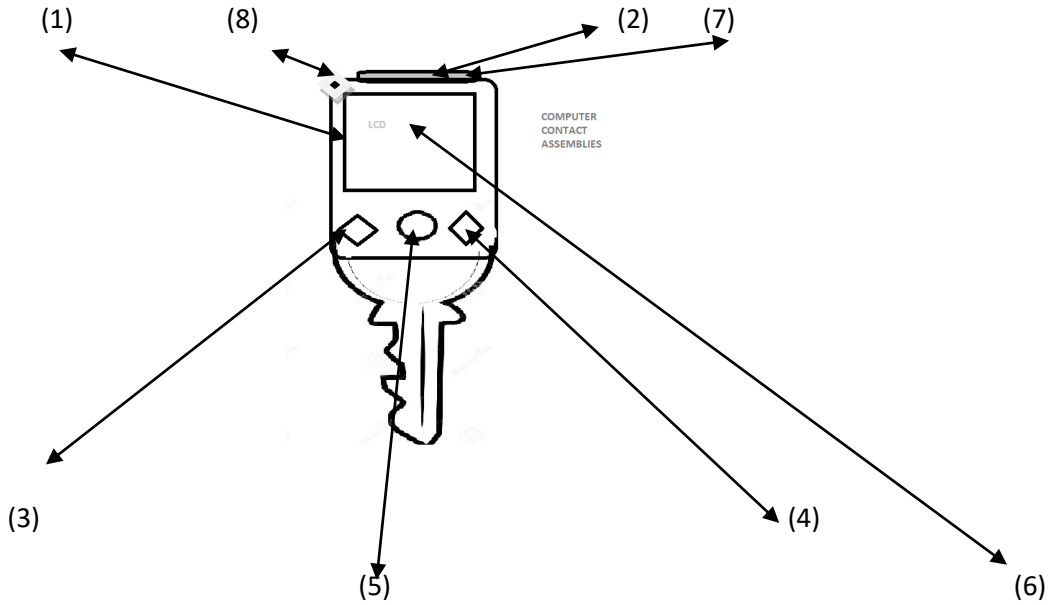

FIGURE 1 : KEY

1) DIGITAL PCB INBETWEEN THE CASE
2) OPTICAL CAMERA
3) PAYMENT SENSORS (DEBIT)
4) PAYMENT SENSORS (CREDIT)
5) CIRCLE STRIP OR SWAB FACILITY WITH PAYEMNT GATEWAY
6) ACCOUNT BALANCE LCD
7) COMPUTER CONTACT ASSEMBLIES TO DOCK /SLEEP ONTO KEYBOARD CONNECTIVITY
8) AUDIO PORT FOR LISTENING TO MUSIC AND TRANSFERING DATA TO EAR HEAD PHONES.

FIGURE 2: Pay By Key with Networks.

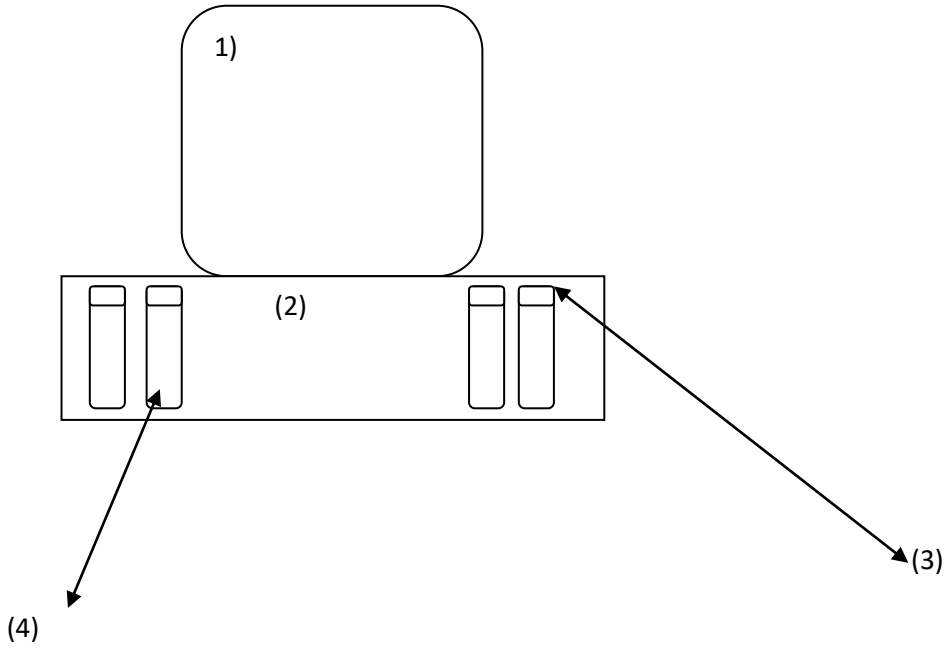

FIGURE 2 KEY:

1) LCD UPPER TFT
2) KEYBOARD
3) CONTACT ASSEMBLIES
4) X 4 PAY BY KEY

DESCRIPTIONS

Here Figure 1. we have a normal key turned into a payment gateway to make transactions to purchase food and beverages and even to any transaction which credit or visa or master card is able to do.

This uses sensors in key and a swipe swab facilty allowing payment to be credited (4) or debited (3). You can add a pager on to the device to even receive messages or send out messages using the computer payment gatewaysystem.

This will transform markets and excel pass mobile payment systems. It is light and easy to carry and the key can be turned in to a pay by computer key using contact assemblies at the top of the key device. The contact assemblies (7) are found in DSLR Camera Bodies which allow the Lens To Communicate to the Body VIA Auto focus thereafter to the PCB.

ABSTRACT

A Key is turned into a payment method. Here we have a LCD and PCB and Contact Assemblies combined with sensors to make payment for goods and services and all payment transactions.

You can credit or debit the amount using buttons on the key. You have LCD display which shows the account balance. You swab or swipe the key to debit from account and is deducted on master accounts.

You can have stack systems on top of each key or plus network drives and can act as security for all transactions. It uses contact assemblies to dock into the keyboard and act as a computer without the Central Processing Unit CPU and Laptop.

CLAIMS

You effectively are using the average key to purchase goods and services with no visa or master card. This is alternative payment gateway which can be turned into a Powerful Bankers computer. You can add money from the key or debit money from the key. You swipe swab and go. Or even Click the finger print recognition button to confirm payment. You can chat and listen to music with the key via external audio ports. A camera can be built into it for facial recognizion.

OPTIMUM EFFICIENT

Well as you have seen by some of the designs it reduces Service Costs and uses ultra optimum efficient service and spare part chains and solutions.

The service facility becomes efficient and does not hold too much stock unnecessary.

The components in this venture are limited and do not need a large holding inventory.

Perfect for customer after sales support.

This system periodically emphasises the use of the keyboard and the redesign of it.

All items can be built in to the keyboard such as kettle, printer, razor etc with the use of contact assemblies on the base of the set.

Even TV's can tun into computers.

The Computer Key can use lithium and solar and motion technology to charge the product.

Key pay can use radio and you tube to optimize the key set built into the key at factory level newly set.

There is derived demand in my "Key Pay", in such that glasses or spectacles can be used to make payment method, writing pens (PEN PAY) can be used to make payment. Also Headphones can be used to make payment for goods and services.

To be true money supply becomes limited and there are less crime and less counter fit money circulating in the economy.

Why not use lipsticks or eyelash curls to make payments or even nail varnish?

Its an option I guess but never been tried.

Mobile Payment systems are thing of the past know, I feel KEY PAY is the most advance and most fastest payment to conceptualise.

Mr Sushil Karsan Bhudia, DIGITAL CAMERA REPAIRS & GRAPHIC DESIGN CENTRE, Euro Hi-Tech Photographic Services Ltd, 51 HONEYPOT LANE, KINGSBURY, HARROW, GREATER LONDON, LONDON, MIDDLESEX, ENG, UK NW9 9QN. sushil@eurohitech.com.
M: 07915382908

NO USB & NO CABLE MATHS FORMULA

NO USB /NO CABLE= 2 (PIN SET ON KEYBOARD (DSLR MIRROR BOX SIDE))

+ 2 (FLAT CONTACTS ON HAND SET (REAR MOUNT CONTACTS LENS SIDE))

+ RELEASE MECHANISM ON KEYBOARD

Where NO USB = (2+ n) or 2n Squared as N Approaches infinity

COPY RIGHT

MULTI TOOTH BRUSH AND RAZOR/SHAVER 2 IN 1 BY EURO HI-TECH PHOTOGRAPHIC SERVICES LTD, MR SUSHIL BHUDIA-**GB2611652.5 FILE DATE: 19-5-26**

DESCRIPTION

This is a toothbrush combined with a men's shaver or unisex razer on one handle.

This example can be computerised with a built in LCD which displays power in the unit, it also has an audio port to listen to music whilst brushing or shaving.

It consists of a speaker and a microphone where you can connect to WIFI built in and use as a telecom for speaking to anyone via telephone through the 2 in 1 system.

It powers up two ways one with a USB port, or alternatively via SLR/DSLR Camera Contact Assemblies on the exemplified unit which docks in to the Key board.

This then use vibrations from the keyboard to charge the unit. Also, a solar power finish with motion detection will be built in the unit, therefore allowing electronic brushing and shaving, streamline.

The unit had a foldable brush and foldable razor or shaver arm which folds or flips in to the centre base unit. With two release units to release the brush or the razer shaver.

It can be made of various common material and digitised by the Main PCB in the central base unit.

The main PCB also allows you to make payment with this 2 in 1 device and acts as a gate way.

This unit allows you to see the payments on the LCD via the credits and debits on account.

PORTABLE 2 IN 1 RAZER AND TOOTH BRUSH

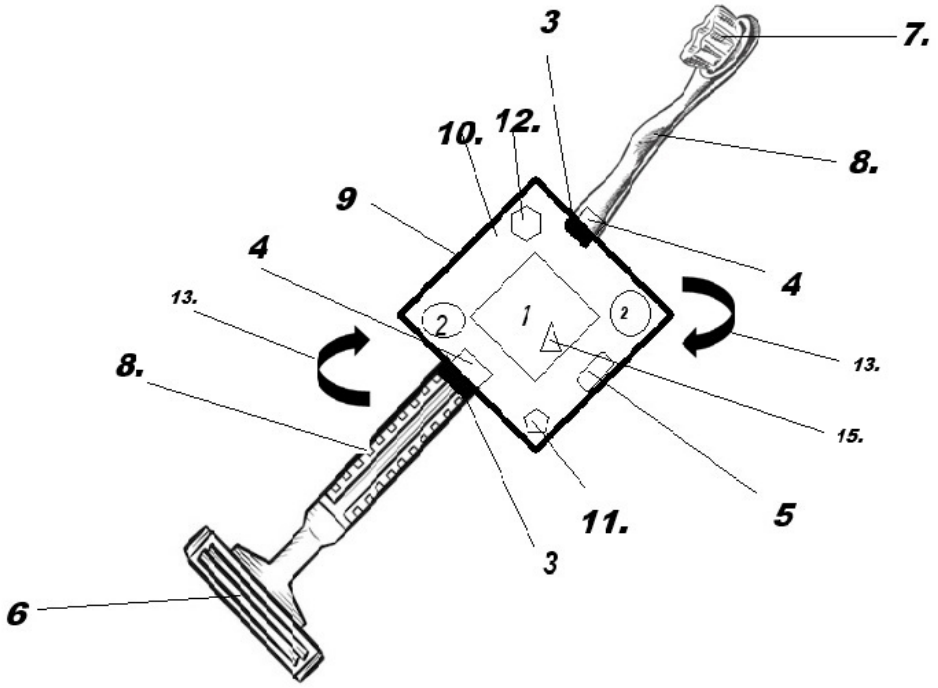

KEY:

1. LCD TO CONNECT TO TELECOM MAKE CALLS AND MESSAGING
2. RELEASE UNIT BUTTONS
3. HINGE TO ROTATE BRUSH AND RAZER INTO CENTRAL PORTABLE COMPACT BASE
4. OPTION OF SLR DSLR CONTACT ASSY FOR CHARING AND DISPLAYING SOFTWARE DOCKED ON KEYBOARD WITH NO CABLES AND DSIPALYED WITH SOFTWARE.
5. OPTION OF USB CHARGING
6. RAZER OR SHAVER
7. TOOTHBRISH /OR ELECTRONIC TOOTHBRUSH
8. HANDLE /GRIP
9. COMPACT CENTRAL BASE UNIT
10. MAIN PCB WITH WI FI OR BLUE TOOTH-PAYMENT GATEWAY
11. AUDIO PORT TO LISTEN TO MUSIC
12. SPEAKER
13. FOLDABLE HANDLE OR FLIP OF HANDLE OR GRIP IN TO THE CENTRAL BASE UNIT/COMPACT BASE UNIT. 180 Degree Rotation. (FLIP MODE)
14. INFRA RED TO MAKE PAYMENTS FOR GOODS AND SERVICES AND BLUETOOTH.
15. CAMERA/OPTICS

SLIM LIME CENTRAL PORTABLE BASE UNIT FOLDABLE BRUSH AND RAZER SHAVER

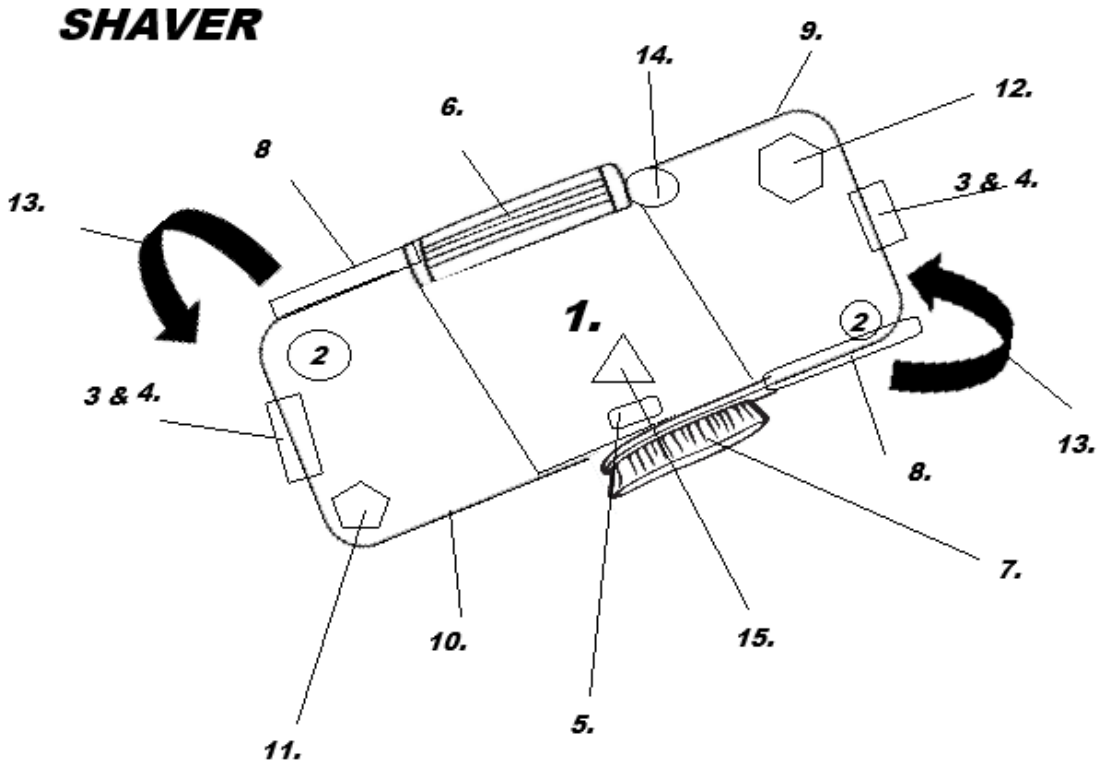

KEY:

1. LCD TO CONNECT TO TELECOM MAKE CALLS AND MESSAGING
2. RELEASE UNIT BUTTONS
3. HINGE TO ROTATE BRUSH AND RAZER INTO CENTRAL PORTABLE COMPACT BASE
4. OPTION OF SLR DSLR CONTACT ASSY FOR CHARING AND DISPLAYING SOFTWARE DOCKED ON KEYBOARD WITH NO CABLES AND DSIPALYED WITH SOFTWARE.
5. OPTION OF USB CHARGING
6. RAZER OR SHAVER
7. TOOTHBRISH /OR ELECTRONIC TOOTHBRUSH
8. HANDLE /GRIP
9. COMPACT CENTRAL BASE UNIT
10. MAIN PCB WITH WI FI OR BLUE TOOTH-PAYMENT GATEWAY
11. AUDIO PORT TO LISTEN TO MUSIC
12. SPEAKER
13. FOLDABLE HANDLE OR FLIP OF HANDLE OR GRIP IN TO THE CENTRAL BASE UNIT/COMPACT BASE UNIT. 180 Degree Rotation. (FLIP MODE)
14. INFRA RED TO MAKE PAYMENTS FOR GOODS AND SERVICES AND BLUETOOTH.
15. OPTICS CAMERA

CLAIMS

I am here by claiming that the solution to combine two handles i.e one for the razer and one for the brush is now combined in to 1 one handle. Both operate at opposite ends of the handle.

The tooth brush and razer or shaver is combined in to 2 in 1 solution, here by saving factory costs and material costs in the R&D.

You can also add a tongue cleaner to this brush, at the opposite where the bristles are.

I claim that the mechanics of the central base unit is computerised with an LCD Panel for battery power and credit and debits of a payment gateway. The infra-red can be used to make payment for goods and services and credits of cash can be debited in to a Post Office or Confectionary store.

Both ends of the handle can fold/flip in o the central base as exemplified by the diagrams to keep it compact. They then can be released by a release mechanism depending if you want to use the brush or shaver or both at the same time.

There is wifi and blue tooth and an audio port when you can send and receive message via the microphone /WIFI and listen to music via premium you tube via the speaker.

You can also take pictures of the cavity by the button built into the LCD via the camera.

There are options for power.

Once is a direct USB Connection with a cable.

The other is the use of ancient SLR DSLR Technology of contact assemblies, this docks the above unit into the keyboard and charges via vibrations and motion and solar panel finish.

There are no cables here in the Use of keyboard docking. This theory is outlined in PAY BY KEY GB2510010.8 AND COMPUTER FILES GB2510034.8.

The razer and toothbrush are built in such a way they fold in o the central base unit, flush.

The blade can be removed and reattached if required for health and safety.

You can also combine a KEY to the central base unit like the ones to open and close doors in cars houses office etc.

So to summarise this device combines the razer and tooth brush on one handle, at each ends. Which then be flipped or folded in to a portable payment gateway into a central base unit.

ABSTRACT

Again to summarise, this is the use of a toothbrush with bristles and a tongue cleaner at one end of the handle, and a razer/shaver at the other end of the handle. *They both combine into one handle.* They then fold into a slim line central base mechanism as shown in the second diagram. And can be released when required to use.

This can be charged by a USB Port in the sort run, and SLR/DSLR Technology of contact assemblies in the long run. So for the latter there is no cable and docks in to the Keyboard and charges by solar motion and vibration.

The MAIN PCB is shock and water splash proof and runs the operating system to allow for messaging, audio, landline phone and payment gateway, to credit and debit the device Banking Account sync by the mobile.

The infra red can allow to make payment on the ISBN BAR CODE so shop pay and go with a tooth brush or shaver.

This reduces waste and is long lasting. It cuts factory cost and is innovation if you look naturally.

It is unique and can watch videos on the LCD of the slim line central base unit.

PAY BY HEADPHONES BY SUSHIL K BHUDIA
Application number: GB2613039.3
Filing date: 04 June 2026

PAY BY HEAD PHONES MR SUSHIL BHUDIA

Abstract.

Here the headphones do five unique aspects.

1) Act as a payment gateway to buy goods and services in the market place.
2) Listen to music/audio/radio via the mobile phone blue tooth via the super stereo.
3) Have built in camera on top of the Head Set for Large Cushioned head pieces, which acts as a third eye and has face recognition system to track friends etc. For Photo and live video.
4) Messaging service via the touch panel of the LCD.
5) Answer mobile phone and land line.
6) Contact assemblies in the longrun for charging and USB connection for short run.

This is a compact lightweight foldable device. The main pcb calculates all the accounts and transactions either debit and credit on to the LCD, for visual display.

The LCD is waterproof and shock/grit proof and Displays colour and is either built into the head set or folds out of the head set.

This removes the need for card payments like visa and MasterCard.

Makes it easier for keep track of social security payments and other funded payment's for the British Public.

The finger print recognition system allows for greater authorization of payments for large debits.

There are cushions of the head set for soft easy fitting on the ear shaped round, squared or in a triangle.

The colour can be in any form.

A messaging service can also be applied via the touch panel of the foldable LCD.

The finish is solar panel and motion detection allowing for greater automatic use.

A USB Connection can be used in the short run or then contact assemblies can be used in the Long run to remove the cable and automatic charging from virbrotrionics when docked in to the keyboard.

Pay by head phones –MR SUSHIL BHUDIA

CLAIMS

By swiping the head set on the card or payment machines or vending machines allows the payment gateway to operate.

Crediting and debiting the account in exchange for goods and services.

The main claim is the “pay by head phones” to buy goods and services and replace cash in society.

The built in camera with high mega pixels allows for great picture and video taking on the head set.

The build in Main PCB calculates all the transactions and saves videos and photos for later use on desktop and mobile phone or ipad.

The Main PCB also allows for payments of credit s and debits into the head phone account.

You can also SMS or whats app message on the Head Set via the Flip out LCD on the ear cushion for wireless devices and LCD on the cable for wired devices.

The speaker is of stereo quality and comes with blootooth so equal dynamics of music can be played.

There is also wife aswell as blue tooth on the Main PCB.

The larger Head Set comes in all sorts of sizes for kids teenagers and adults and in different colours.

You can use USB or contact assemblies to charge the device where the later has been outlined in previous thesis with the IPO UK Dept.

The finish is also solar powered with swiss motion detection to allow for greater battery shelfing life.

This si a fast quick and effective payment method for everyone in society.

PAY BY HEADPHONES BY SUSHIL BHUDIA

DESCRIPTION:

Here we have a wireless headphone or one with a wire, which not only plays music from the mobile phone via blue tooth onto the speaker but also allows you to make payment, for goods and services and any monetary /card replacement consumption.

The built in Main PCB and LCD allow for greater autonomous payment gateway and the latter displays credit and debit card and account info on the earpiece of the LCD.

It is compact with the cushion on the earpiece and comes complete with a newly set camera on top of the head set.

The data is being saved on the Main PCB allowing you to play back record a live view data on the PC or mobile phone or I pad.

There are no cables and runs via a Bluetooth mechanism to data radio Transmit to the speaker any audio you may want to received.

The head set also allows to answer any mobile phone and land line through the Main PCB Design. It is complete and compact.

The audios is of high quality and images are also high resolution with high mega prixels.

The main emphasis is the swipe by removing the head piece from the head on to the card holder reader and debiting or accepting payments on to the unique account of the head piece.

Payments can be credited into the post office branch and debited also from the post office. The accoutns will automatically build up.

To prevent theft or lost of head sets a Finger Print Recognition is built in on the ear price to authorise payments or not or to suspend the account.

Listen to music on the go and make payment for shopping on the mobile or physically in the store. Comes complete with infra red so payments to ISBN Can also be made to shop pay and go.

These are headphone can fold up aswell and the LCD can be placed on the cable rather then head set for the wired head sets.

PAY BY KEY BY SUSHIL BHUDIA

DRAWINGS:

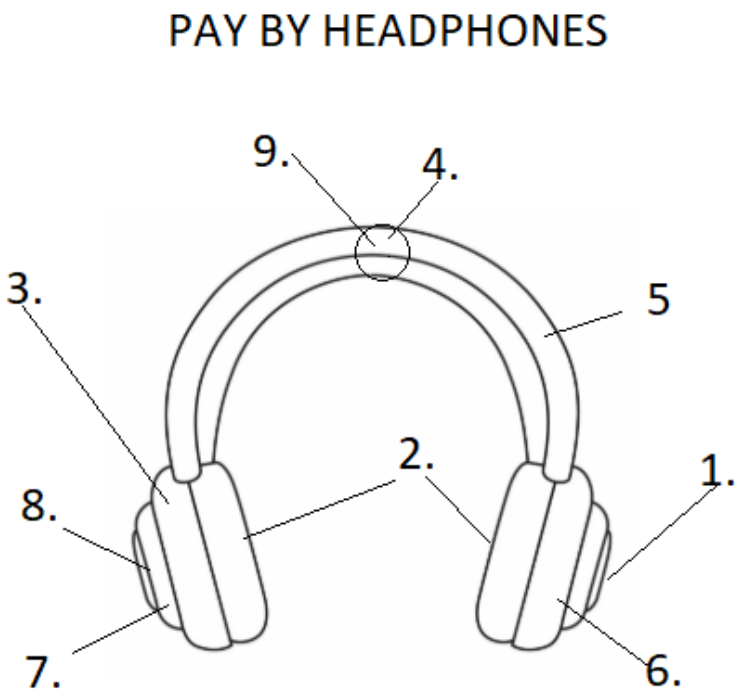

KEY

1. FOLDABLE LCD –FOR DISPLAYING CREDIT/DEBITS AND MESSAGES AND BATTERY LIFE
2. SPEAKER –STEREO FOR AUDIO
3. MAIN PCB /BLUE TOOTH /INFRA RED/PAYMENT GATEWAY
4. DIGITAL CAMERA
5. CURVED HEAD REST
6. EAR CUSHION
7. SOLOR PANEL-MOTION DETECTION
8. FINGER PRINT RECOGNITION SYSTEM FPR
9. CONTACT ASSEMBLIES OR USB.

Mr Sushil Karsan Bhudia, DIGITAL CAMERA REPAIRS & GRAPHIC DESIGN CENTRE, Euro Hi-Tech Photographic Services Ltd, LOFT OFFICE, 51 HONEYPOT LANE, KINGSBURY, HARROW, GREATER LONDON, LONDON, MIDDLESEX, ENG, UK NW9 9QN. sushil@eurohitech.com.
M: 07915382908

4-6-26
Your reference: PAY BY GLASSES

Application number: GB2613080.7
Filing date: 04 June 2026 @ IPO UK

DEVAT COMPANY

SINCE 1991

PAY BY GLASSES/SUN GLASSES/ SPECTICLES BY SUSHIL KARSAN BHUDIA

CLAIMS

I here by claim that my invention of the glasses/sun glasses/ spectacles in any size or fit allows you to make payment for goods and services via the payment gateway Sensors in the frame.

You can check payments like credits and debits when you enter codes into the computer or connect via USB plug and play.

They can be of any size and colour with or without the tint.

It can record or observe video of any activity via the central digital optical camera built in to the frame.

The Interconnecting Processor IC collects all data and can be used as a payment option and then reordered on a software which collects all transactions.

There is a USB or Contact Assy for power, which also uses solar and motion detection technology using light and motion for collecting data.

There is an audio port for listening to the radio or music via headsets or even answering the land line or mobile phone via the connectivity from audio to glasses.

There is a di- optic for adjusting the Lense to the eyelevel found in SLR and DSLR cameras near the View Finder.

Conversely an Finger Print Recognition system on the side of the glasses Authorise payments.

PAY BY GLASSES/SUN GLASSES/ SPECTICLES BY SUSHIL KARSAN BHUDIA

ABSTRACT

Here we have any size sunglasses/spectacles/glasses which fit on the eye level for people with blurred or out of focus vision.

his device or glasses shall we call it, can be sued to make payment like a credit or debit card by removing them and thereafter swiping them on to a swipe machine.

They can effectively pay for goods and services with a “swipe” from the centre of the MAIN PCB Location/ Sensors of the payment gateway on the glasses.

The glasses off course have to be removed to make the transaction.

They can apply to sun glasses and spectacles and glasses, which can there by purchase milk and bread and butter.

And be an effective replacement for the credit and debit card.

There is a special coating on the glasses like a strip along the credit cards to make this transaction.

You can listen to radio via connection of headphones via the audio port. Or twin up your mobile phone to listen to you tube or any other music player.

The camera in the middle of the frame records day to day activity and can be played back with wifi on the main pcb connected to a keyboard or desk top via contact Assy for the former and cable for the later.

An infra-red scans the ISBN and makes it cashier less markets. Shop Scan Pay and Go.

PAY BY GLASSES/SUN GLASSES/ SPECTICLES BY SUSHIL KARSAN BHUDIA

DESCRIPTION:

This is a sunglasses/spectacle/reading glasses/glasses for people with blurred vision our out of focus vision to make physical payment for a goods or service via a swipe through the payment gateway mechanism.

There is a radio and built in plug and play usb processor allowing to connect glasses to a desktop or mobile computer.

You listen to music whilst connecting to the audio port via the glasses software and correct the lenses to eye level via a SLR /DSLR Found Di optics.

The infra-red/sensor makes payments on the ISBN of the item and a swipe of the glasses help to make the complete transaction.

Micro Main PCB with the IC Processor calculates the debits and credits and does additional software work.

The build in camera allows for footage of the day and week and month collected in a system and allows for the glasses to take a picture via a shutter release unit on the rear frame handle.

The finish is solar powered with Swiss watch timely motion detection allowing for greater automatic use and long shelf line.

These are robust designs condensation proof and scratch proof frames and lenses. Designed for wear and tear.

PAY BY GLASSES/SUN GLASSES/ SPECTICLES BY SUSHIL KARSAN BHUDIA

DRAWINGS

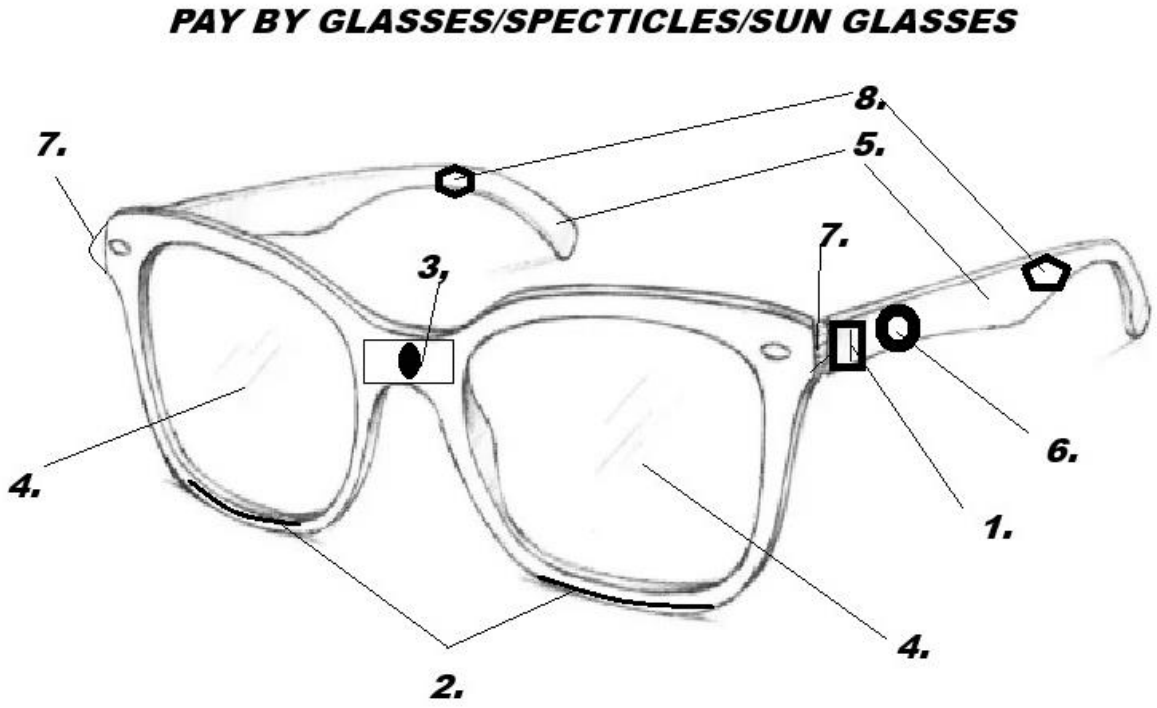

KEY:

1. USB PN THE LEFT OR RIGHT OF THE GLASSES OR BOTH SIDES, WHICH ALLOW TO CONNECT TO IPAD IPHONE DESKTOP OR EVEN LISTEN TO MUSIC/RADIO VIA HEAD PHONES OR EVEN TALK VIA HEAD SETS WHNE ATTACHEDVIA HE AUIDIO PORT
2. THIS REFERES BACK TO MY FOLLOWING PATANT APPLCATIONS:
   A) GB2613039.3 FILED 4-6-26
   B) GB2510010.8 FILED 23-6-25
   C) GB2611652.5 FILED 19-5-26
   D) GB2510034.8 FILED 23-6-25

   A contact Assembly around the rim can be used to charge the sun glasses via solar finish and motion detection.

   They can be docked in to the cable in the long run and not require the USB Connection with the cable which is ideal in the short run.

   This contact assembly found in SLR/DSLR cameras can use the glasses to fit in to the keyboard and use the processor to select viewing captured by the camera.

3. MAIN PCB Circuit with the processor and built in optical digital cameras-for videoing footage of the day month and year/
4. Glass Lenses
5. Frame / foldable option in different colours.
6. Audio port to listen to radio/land line and make calls on to mobile phone from the glasses
7. Di optics found in DSLR’s near the viewfinder, to adjust the lens viewing to eye level correctness.
8. Release Unit to take pictures or take video footage.

EURO HI-TECH PHOTOGRAPHIC SERVICES LTD

I.T COMPUTER SYSTEMS
PROJECT 2026

COPY RIGHT. ALL RIGHTS RESERVED

BY SUSHIL BHUDIA

COPY RIGHT ALL RIGHTS RESERVED

FRONT COVER (Casing)

REAR COVER (Casing)

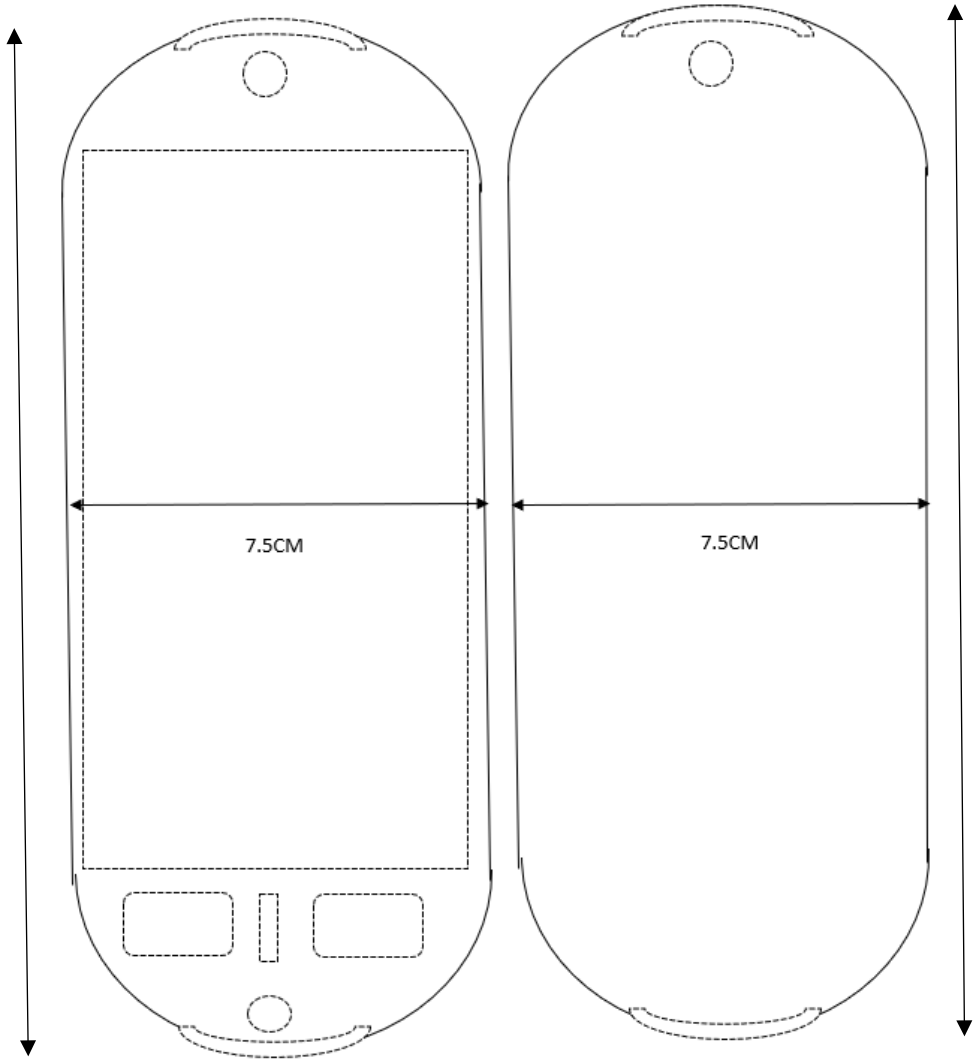

16CM

16 CM

BY SUSHIL KARSAN BHUDIA

COPY RIGHT ALL RIGHTS RESERVED

FRONT COVER (Casing) REAR COVER (Casing)

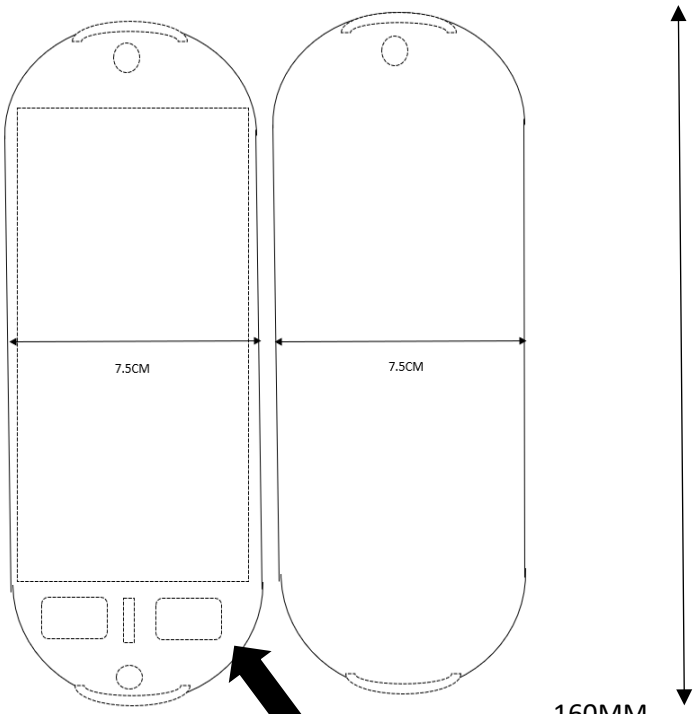

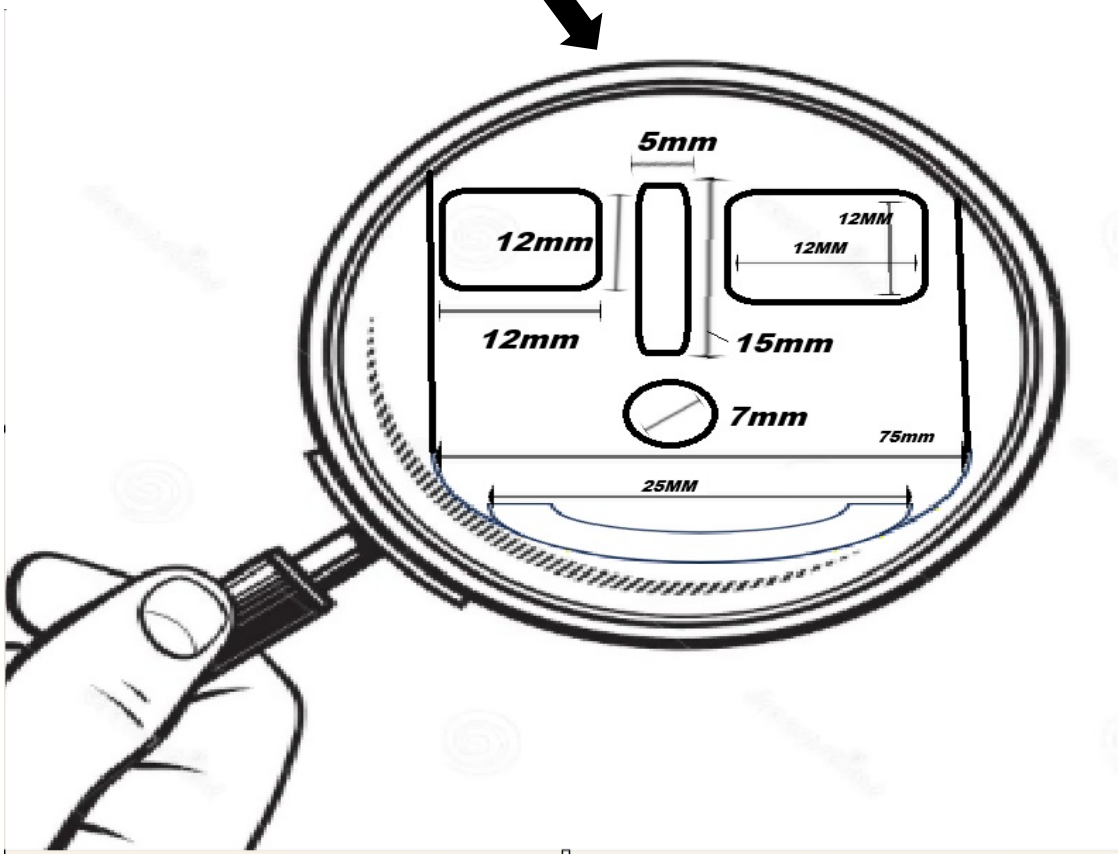

Topology Triangle
Faces 241,336
Vertices 120,664
Printability

Topology Triangle
Faces 248,488
Vertices 124,232
Printability

KEYBOARD DESGIN WITH MEASUREMENTS -EURO HI-TECH PHOTOGRAPHIC SERVICES LTD

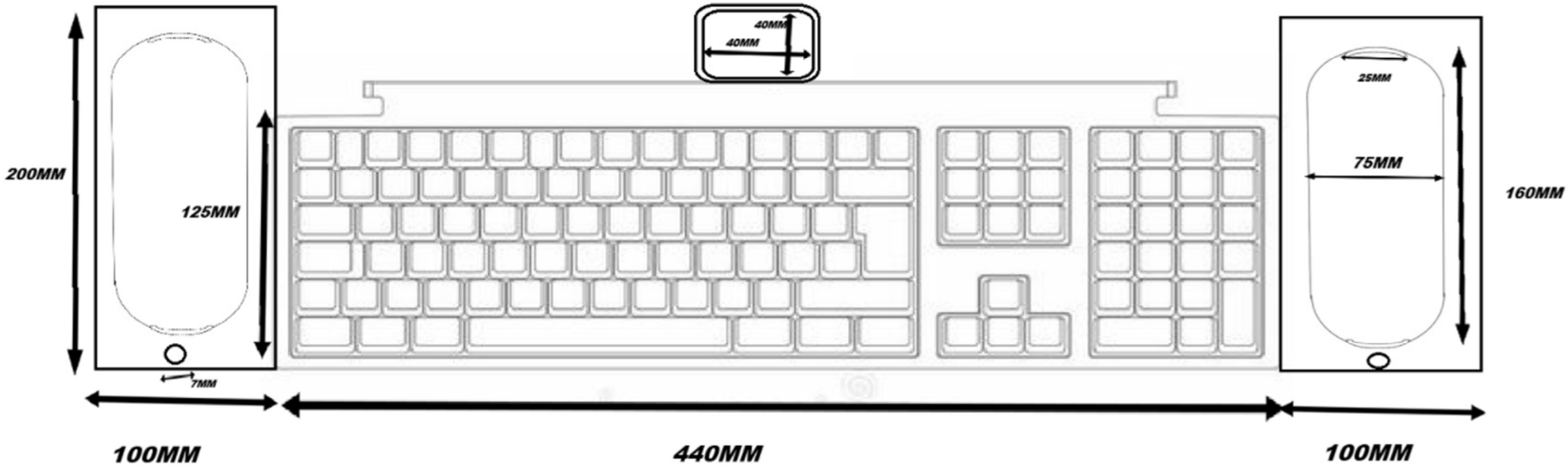

KEYBOARD DESIGN BY SUSHIL BHUDIA-EURO HI-TECH PHOTOGRAPHIC SERVICES LTD

EURO HI-TECH PHOTOGRAPHIC SERVICES LTD -DESIGN OF TFT LCD UPPER WITH MEASUREMENTS

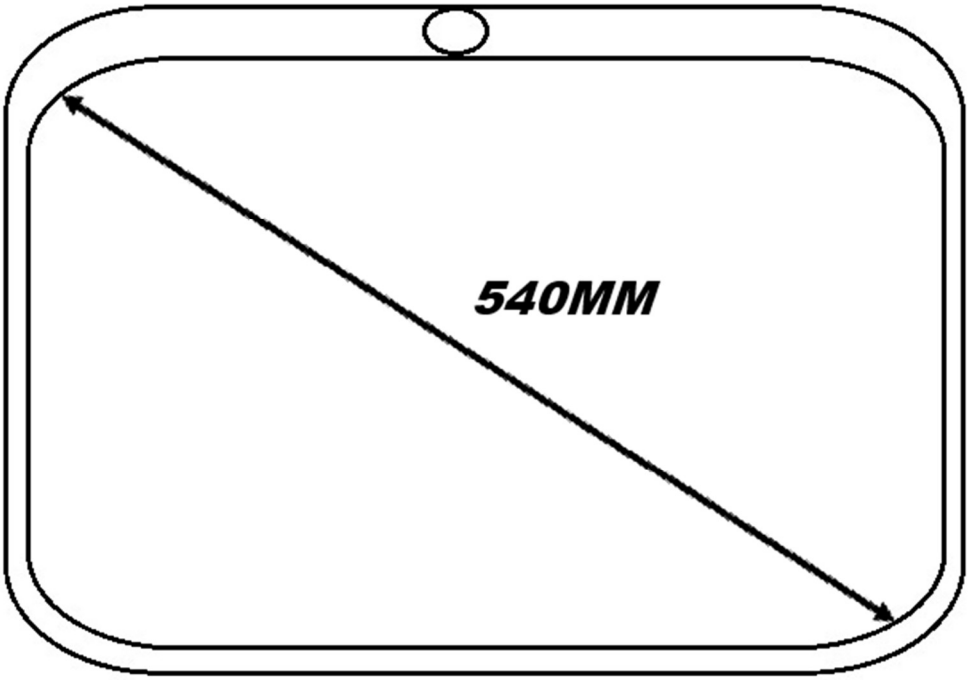

TFT SCREEN UPPER -BY EURO HI-TECH PHOTOGRAPHIC SERVICES LTD

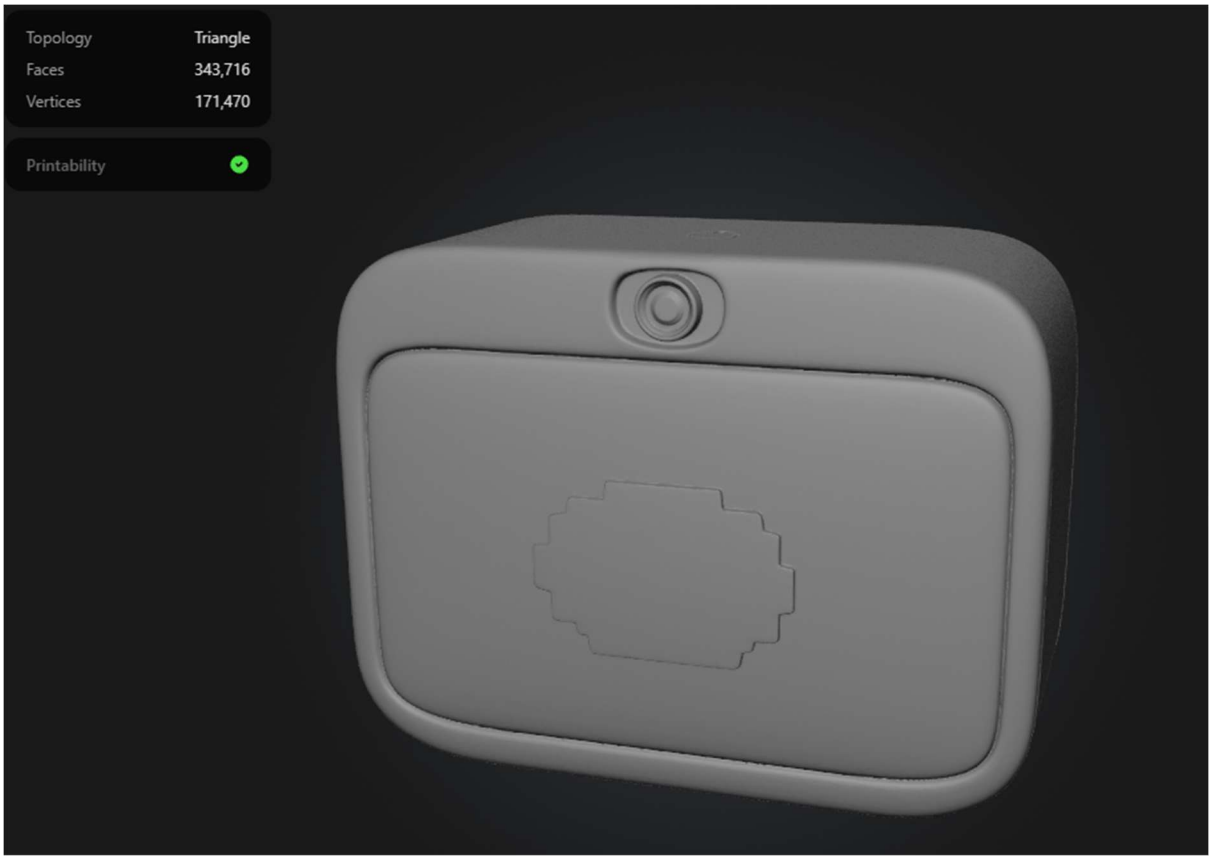

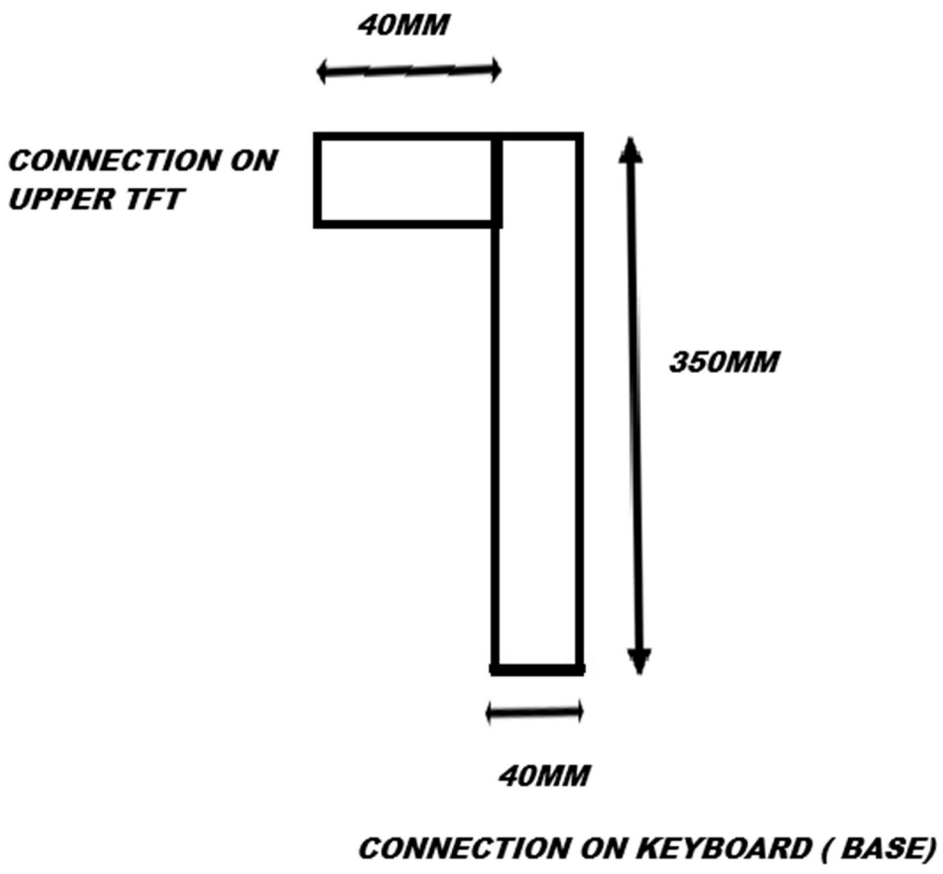
40MM
CONNECTION ON
UPPER TFT
350MM
40MM
CONNECTION ON KEYBOARD (BASE)

3D DESIGN OF STAND 01-8-26-EURO HI-TECH PHOROGRAPHIC SERVICES LTD

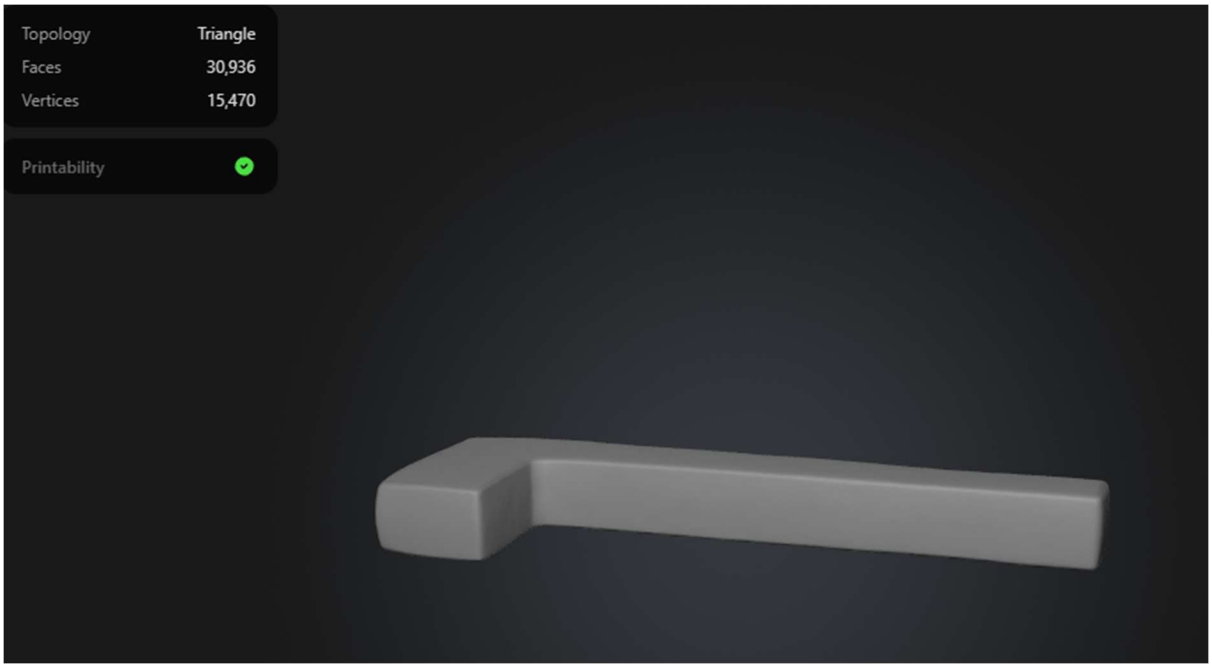

CONTACT ASSY & DIAL ASSY

NO USB & NO CABLE MATHS FORMULA

NO USB /NO CABLE= 2 (PIN SET ON KEYBOARD (DSLR MIRROR BOX SIDE))
+ 2 (FLAT CONTACTS ON HAND SET (REAR MOUNT CONTACTS LENS SIDE))
+ RELEASE MECHANISM ON KEYBOARD

DIAL ASSY (ASSEMBLY) TO READ THE Av & Tv ON DSLR-FITS AT THE BASE ON THE MOBILE PHONE

DRAWINGS FILE NUMBER: GB2622127.5 -22-9-26

KEY MAIL /KEY PAY/KEY AUDIO

KEY TO KEY MAILING SYSTEM

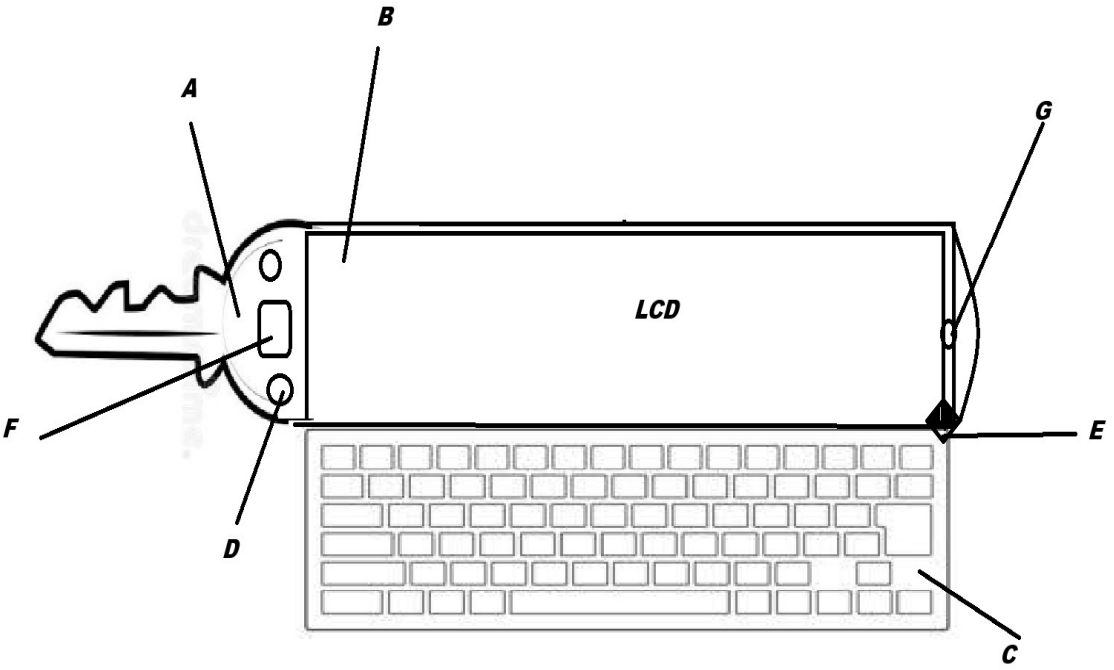

KEY

A: KEY

B: LCD TOUCH PANEL

FOLDABLE /MAIN PCB

C: FLIP OUT TOUCH KEY

BOARD FOR MESSAGES

D: PAYMENT SENSORS

E: AUDIO PORT

F:DIGITAL UNLOCK AND LOCK/CENTRAL LOCKING

G: CAMERA DIGITAL

FILE NUMBER : GB2622127.5 ------22-9-26DESCRIPTION:

Here we have any type of standard key to be used for payment/audio or key mailing system.

The key has a built in main pcb allowing for messages to be sent and received from key to key. Using "**KEY**" names to transfer data.

Example IPOUK **KEY** NEWPORT or SUSHIL**KEY**BHUDIA.

The term key will be sequenced into a matching database and all pdf files and files and video images and photos will be transmitted with messages.

A whole new concept of messaging will be enforced.

A coloured flashing light or vibration of the key will inform the use when a message has been received.

A Star will be used when the message has been read on the touch lcd panel.

The touch lcd panel comprises of a foldable system LCD. It can be compact and versatile.

People can register for the key by supplying ID documents and residential documents.

Without a home in the UK you can not use this KEY.

A KEY is for British Passport Holders or to hold Info about Birth Certificates or Drivers Info.

The key can be remotely controlled off and on the road of the car.

The key can use official passport name and address.

There are also sensors to make a payment and the after credit and debit the account, for goods and services.

There is no petrol forecourt in the world which allows for fuel payment by key.

There is not hotel room where you can order or shop from a key. (KEY SHIOP)

There are KEY SITES like WEBSITES On this key.

You can listen to music by connecting to Bluetooth or audio headphone jack.

Digital central locking is also part of the key. The buttons become digitised.

There is a camera to take and video images. AND PUT ON KEY SHOP SITES.

FILE NUMBER : GB2622127.5 -----22-9-26CLAIMS.

I here by would like to claim that this device or this KEY all be it a pad lock, DLOCK, Standard Key for unlocking and locking a lock can send KEY TO Key **Messages** by registration of passport names and address using KEY instead of @ on email.

“KEY” MAIL

This key can make payment for goods and services by having a built in magnetic coating and coded to the bank account.

It comes complete with Wifi and Bluetooth and works with solar and motion detection.

It uses USB Connection the short run but SLR CONTACT Assemblies in the long run as outlined in the theory of PAY BY KEY GB 2510010.8

You can dock the KEY INTO the keyboard and simulate the LCD to the upper LCD using WYSIWYGT, what you see is what you get twice. This uses a computer to interact without the CPU or Lap TOP.

It comes complete with a Foldable LCD panel touch with a build in touch keyboard.

It comes complete with a digital still optics for photos and video transfer.

There is a speaker and microphone for voice data calls.

You can listen to music from the key with the option of audio jack.

These are all newly factory built into the key set and not an accessory or key ring. This is not a mobile phone or a phone.

This is a key which allows you to send and receive messages via KEY Sequencing (names and address of door building)/ it allows you to **pay** for goods and services via a SWIP or a device and you can listen to **AUDIO** /Radio on this device.

It also comes complete with digitised Central Locking Buttons and sensors for payment.

FILE NUMBER : GB2622127.5 ------22-9-26/ABSTRACT

The key can be used to send and receive messages to other keys by the “KEY” coding system or sequencing. To a name or an address of the building. (LIKE **@** on email) /(BECOMES **K** MAIL)

This applies to D-LOCK Keys, PAD LOCKS and Office Door Lock Keys /Auto mobile KEYS and any type of device which uses a lock and unlock mechanism.

The key will have its own programme and can be used to store data and do online key shopping.

It can take photos from a built-in digital camera and video images.

You can listen to music via Bluetooth or audio jack.

It has a foldable touch lcd with touch keyboard to make it compact strong and effective design with rust and water proof.

You can also make payment with this key for goods and services.

No Rickshaw in India can make payment for fuel, no black cab/uber in London Accepts payment for tours and travels. No ATM in the world withdraws payment with a KEY which has an audit or Finger print recognition on iris recognition system.

Application for a filing date, search and examination submitted

Application number

GB2622127.5

Your reference

KEYMAIL

NEW TYPE HEADPHONES WITH MESSAGE DISPLAY /MUSIC AUIDO DISPLAY/BANKING GATEWAY PAYEMENT

HEAD PHONES, (HP) WITH MAILING/MESSAGING SERVICES /PAYMENT GATEWAY AND BASS AUDIOS SPEAKER BASS & CAMERA

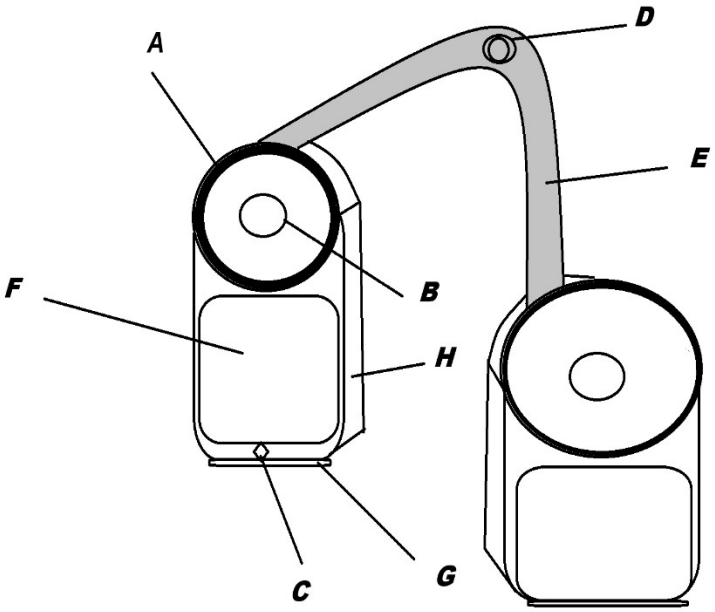

FRONT ON VISION OF HEAD PHONES NEWLY SET

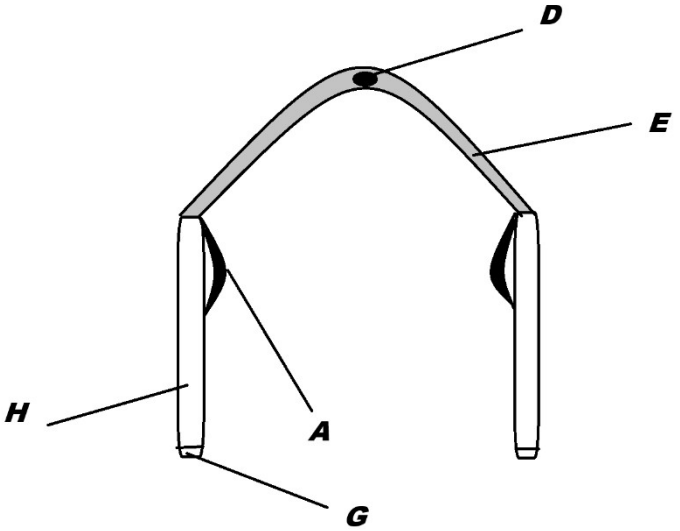

NEW TYPE HEADPHONES WITH MESSAGE DISPLAY /MUSIC AUIDO DISPLAY/BANKING GATEWAY PAYEMENT

THE ADUSTABLE ROTATING LCD HEADPHONES WITH X 4 LCD PANELS TOUCH, COMPLETE NEWLY FACTOY SET WITH PAY, HP MESSAGE, BASS AUDIO

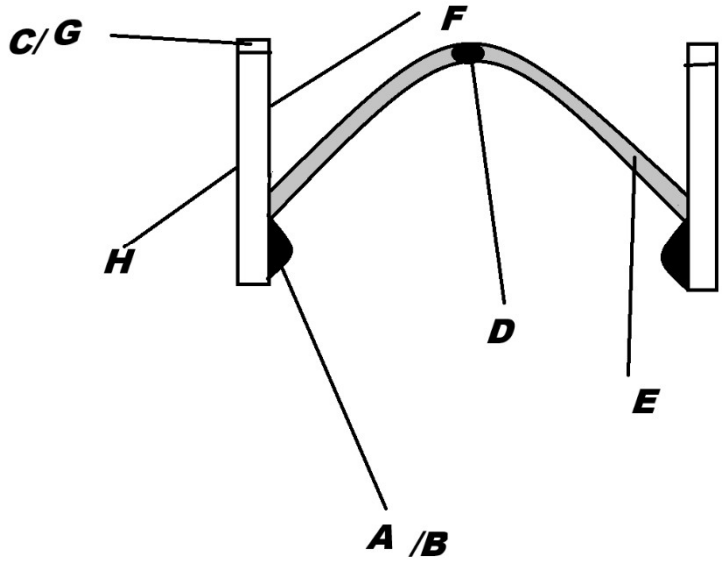

KEY:

A: EAR PIECE CUSION

B: BASS SPEAKER

C: MICROPHONE

D: DIGITAL OPTICAL CAMERA

E: HEAD REST ADJUSTABLE

F: DOUBLE SIDED LCD TOUCH PANEL X 4 LCDS COMPLETE WITH LIVE OPERATION-FOR MESSAGE DISPLAY, AUDIO MUISIC DISPLAY AND PAYMENT GATEWAY.

G: SHORT RUN USB /LONG RUN CONTACT ASSEMBLIES OUTLINED IN THE THEORY OF CONTACT ASSEMBLIES' GB FILE NUMBER GB2510034.8.

H: MAIN PCB LCD BOX, BASE UNIT. WITH TRANSMISSION TO IN CAR ENTERTAINEMNT AND COMPUTER VIA A NEW TYPE OF RADIO. THIS CAN FLIP UP AND ROTATE ANY ANGLE.

Mr Sushil Karsan Bhudia, DIGITAL CAMERA REPAIRS & GRAPHIC DESIGN CENTRE, Euro Hi-Tech Photographic Services Ltd, LOFT OFFICE, 51 HONEYPOT LANE, KINGSBURY, HARROW, GREATER LONDON, LONDON, MIDDLESEX, ENG, UK NW9 9QN. sushil@eurohitech.com.
M: 07915382908

OPTIMUM PAYMENT GATEWAY SOLUTION
Monetary Innovation
TOUCH PAYMENTS.

Collection of Finger Prints Data and Iris Payment Data allow for “Touch Payments” & “Iris Payment Gateway”/Touch & Go Systems to make payment for Goods & Services.

Barcodes and Product ID become computer optimised for customers to search for price and then touch the packaging of the product by “finger Tip” to withdraw payment from their human touch account.

The packaging on every product must contain a touch LCD with Sheets, powered by solar lithium power battery with motion detection. Thereafter this can also apply to Transit in goods. Where a Touch LCD Panel with Finger Print recognition system is used for example on the Royal Mail

Mr Sushil Karsan Bhudia, DIGITAL CAMERA REPAIRS & GRAPHIC DESIGN CENTRE, Euro Hi-Tech Photographic Services Ltd, LOFT OFFICE, 51 HONEYPOT LANE, KINGSBURY, HARROW, GREATER LONDON, LONDON, MIDDLESEX, ENG, UK NW9 9QN. sushil@eurohitech.com.
M: 07915382908

“Special Delivery” Parcel, allowing for more efficient and effective tracking system.

You touch the Product LCD or computerised LCD barcode on the product, and payment is withdrawn from the human touch account. Simply by touch.

You touch the Special Delivery Tag by finger print, it records all personal DATA and Allows you to track the parcel direct worldwide on any of the devices I have outlined my theory.

Mr Sushil Karsan Bhudia, DIGITAL CAMERA REPAIRS & GRAPHIC DESIGN CENTRE, Euro Hi-Tech Photographic Services Ltd, LOFT OFFICE, 51 HONEYPOT LANE, KINGSBURY, HARROW, GREATER LONDON, LONDON, MIDDLESEX, ENG, UK NW9 9QN. sushil@eurohitech.com.
M: 07915382908

COLLECTION OF ALL FINGER PRINT AND IRIS DATA

IPO & WIPO FILING UK

A) GB2613039.3 FILED 4-6-26/ PAY BY HEADPHONES -**DAS**-E72D

B) GB2510010.8 FILED 23-6-25 /PAY BY KEY + WIPO-**DAS**-62FD

C) GB2611652.5 FILED 19-5-26 / MULTI TOOTH BRUSH AND RAZOR AND SHAVER **(NO DAS FILE OBTAINED)**

D) GB2510034.8 FILED 23-6-25 /COMPUTER-**DAS**-0CD9

E)GB2613080.7 FILED 4-6-26/ PAY BY GLASSES -**DAS**-C35C

F)GB2622127.5 FILED 22-9-26/KEY MAIL.

The above files I have discussed allow my network of companies to collect all data, and thereafter each finger tip and eye iris become a payment gate way just by touch. This discontinues QR's.

This is new type of payment derived from my payment gateways above file numbers.
This has vast economic benefits for the UK in terms of becoming a world leader in technology.

SHOP SHELF CHECKOUT

GB FILE NUMBER GB2622530.0/ FILED 24-9-26

SHELFS PACKED WITH TECHNOLOGY.

DRAWINGS

DESCRIPTION

Here we have a standard shopping shelf of rows filled with goods and products 1. in the retail shop.

Each shelf has a weighing scale aligned to the product. At the bottom of the shelf located at 2, there is a built-in self-checkout scanning system or payment option gateway LCD. Allowing the customer to check the price or stock live and make a payment from the various payment options for each item they dispense from the shelf.

This is shelf checkout which is bagged into a rucksack. No trolley.

You can pay by finger print/iris payment via the built-in shelf camera. Or you can pay by my payment gateway concepts.

Here we can keep a record of transactions and ID of who is buying the item. No Self-Checkout /No employees.

Abstract.

I would here by like to summarise that the shelf of each product consists of all the technology of the product on the shelf.

The shelf has a unique location of the product and a weighing scale along with the FPR Camera and IPR Camera.

So when the product is removed from the shelf a price indicates the charge price which is then paid for by my payment theories by key/sunglasses etc.

I would like say the Main PCB is located in between the shelfs which hold the item, allowing the customer simply to scan the technology scanning area of the shelf to make payment assess price etc.

FPR = FINGER PRINT RECOGONITION

IPR= IRIS RECOGNITION SYSTEM.

This is the theory of payment options in Shelf Check Out.

Not Self Checkout.

CLAIMS

I here by claim the concept of Shelf Check out is a new concept. It is the digitisation of the shelf system. It consists of all the data of the products, wight name and ID etc.

The in front of the shelf where the labels are kept it consists of a scanner and a camera to accept my theory of payment options such as key/glasses /and computer mobile camera.

This may have limitations of accepting cash, but not impossible.

Its like a shelf vending machine but without the front glass. And Each product location can allow the customer to transfer human account payment from their account. The other options was to has an Oyster type FPR packaged on each product all over the world, so my payment concepts can with draw the case.

Application for a filing date, search and examination submitted

Application number

GB2622530.0

Your reference

SHELF CHECKOUT

Mr Sushil Karsan Bhudia, DIGITAL CAMERA REPAIRS & GRAPHIC DESIGN CENTRE, Euro Hi-Tech Photographic Services Ltd, LOFT OFFICE, 51 HONEYPOT LANE, KINGSBURY, HARROW, GREATER LONDON, LONDON, MIDDLESEX, ENG, UK NW9 9QN. sushil@eurohitech.com.
M: 07915382908

REF: RESEARCH INTO COMPLETING THE CIRCUIT ON HAND SET & NO USB CABLE/

In order to complete the USB by using SLR/DSLR Contact Assemblies, the attached flex connecting pcb will also be required.

I have attached the photo of this flex connecting pcb below:

This is part number YH1-0105-000 from canon inc.

This solders in with the lens side contact assembly rear mount CA2-4583-000 on the to Main CPB.

Therefore, completing the USB Socket using this contact ASSY block and no cable required. Thus, allowing for effective data transfer on to the Mirror Box Pin Side Pin Set CG2-4842-000 built onto the keyboard.

Mr Sushil Karsan Bhudia, DIGITAL CAMERA REPAIRS & GRAPHIC DESIGN CENTRE, Euro Hi-Tech Photographic Services Ltd, LOFT OFFICE, 51 HONEYPOT LANE, KINGSBURY, HARROW, GREATER LONDON, LONDON, MIDDLESEX, ENG, UK NW9 9QN. sushil@eurohitech.com.
M: 07915382908

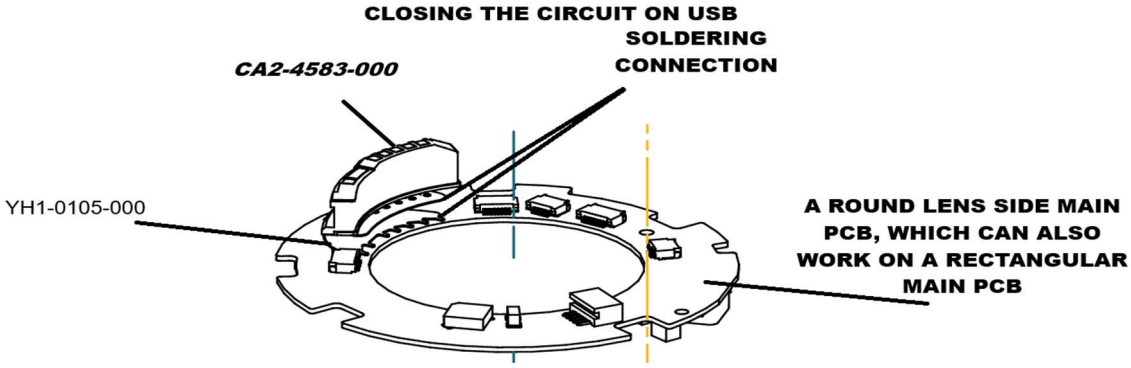

I hope this information helps to explain the minimization of USB Sockets and USB Cables.

As the above connection can be charged with solar panel backs and connected to motion detection technology to reduce space allocation in battery pack.

Thanks for your time

MR Sushil Bhudia Esq

Ref: SERVICE MANUAL EF 24-70MM F2.8 L USM MK1

REF: & EF 24-70MM F2.8 L II USM